Wall SMART	Model: RETROFIT BEZEL iPad MINI 1-3 W.GRILLS BLACK	Family: WALL-SMART	
		DWG NO. 10-04-547-SPC	
	Model No.: 10-01-547	PRODUCT SPEC.	REVISION A DATE 29/June/2016

Make Your Wall Smart

"RETROFIT BEZEL iPad MINI 1-3 W.GRILLS BLACK" - Product description:

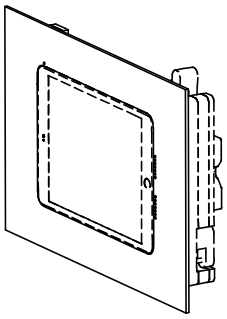

The "RETROFIT BEZEL iPad MINI 1-3 W.GRILLS BLACK" is a bezel design for the "RETROFIT MOUNT BASE FOR iPad MINI " P/N 10-01-540 (An adapter for in-wall nearly flush retrofit installation of iPad mini®)

Key features and benefits:

- Nearly flush with the wall (3mm [0.12"] thick on-wall bezel).
- Bezel contains audio speaker and mic. grills.
- Attaches magnetically to the retrofit wall mount base.
- Designed for the use with iPad mini 1, 2 & 3 (by Apple) (iPad is not included).
- The bezel is supplied painted black.

Key properties:

- Dimensions: (W/H/D): 318.3mm (12.53")/ 215.9mm (8.5")/ 3mm (0.12")
- Weight: 0.1Kg, 0.22lbs.
- Material: Moisture resistant MDF

iPad® is a trademark of Apple Inc., registered in the U.S. and other countries.

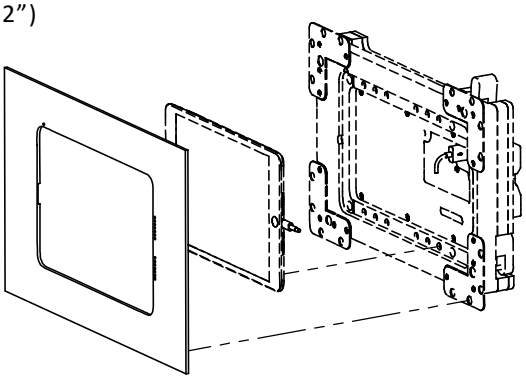

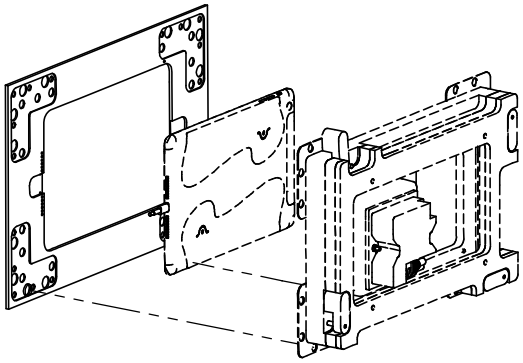

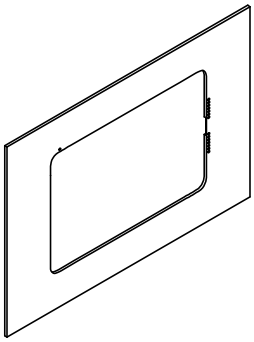

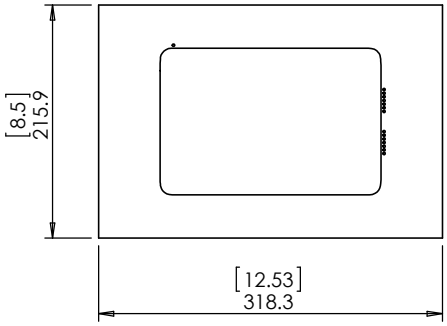

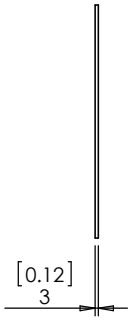

INFORMATION CONTAINED HEREIN IS PROPRIETARY AND MAY NOT BE USED, REPRODUCED OR COPIED WITHOUT WRITTEN CONSENT OF WALL-SMART ©

Phone: (201) 205-2056 / info@wall-smart.com