Wall SMART	Model: WS FOR CONTROL4 T3 10" RETROFIT BLACK / WHITE	Family: WALL-SMART	
		DWG NO. 10-04-329-SPC	
	Model No.: 10-01-329-BL / WH	PRODUCT SPEC.	REVISION A DATE 09/June/2015

Make Your Wall Smart

"WS FOR CONTROL4 T3 10" RETROFIT" - Product description:

The "WS FOR CONTROL4 T3 10" RETROFIT" is an adapter for in-wall installation of T3 Control 4 10" touch screen.
The "WS FOR CONTROL4 T3 10" RETROFIT" securely mounts the touch screen while allowing easy access, insertion and operation.

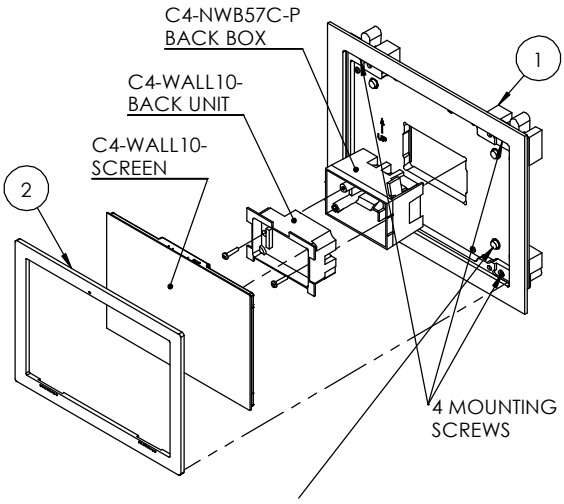

Attach 4 foam pads in the marked circles on the back wall. (Foam pads supplied by Control4 with the 10" touch screen Control4 P/N 180-00035-A).

Optionally, The foam pads may be attached to the back of the screen according Control4 "Installation Tips" 200-00420-A

Install screen according Control4 manual 200-00387-D

Key features and benefits:

- Protrudes only 4mm [0.16"] out of the wall.
- Allows easy insertion and removal of the touch screen.
- The adapter is supplied painted either black (-BL) (color: RAL9005 60% gleam) or white (-WH) (color: RAL9003 60% gleam)
- Designed to be installed in 11mm[0.43"] – 21mm[0.82"] wall.
- Designed for the use with C4-WALL10- touch screen (by Control4) (touch screen and back box not included).
- Adapter kit contains:
  1. Wall adapter;
  2. Bezel;

Key properties:

- Dimensions (W/H/D): 332mm (13.07")/ 259.2mm (10.2")/ 44mm (1.73")
- Power Supply: None (manual adapter).
- Weight: 0.86Kg, 1.83lbs.
- Material: Moisture resistant MDF

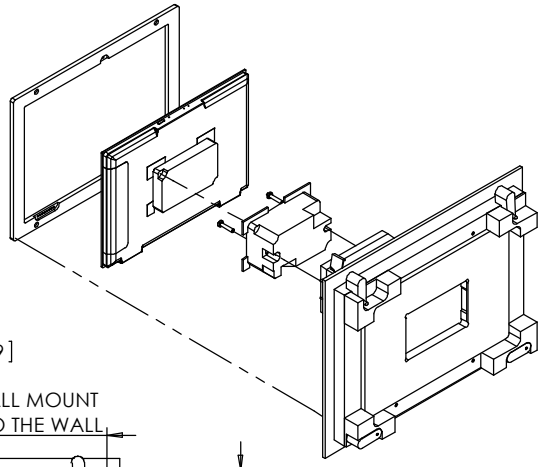

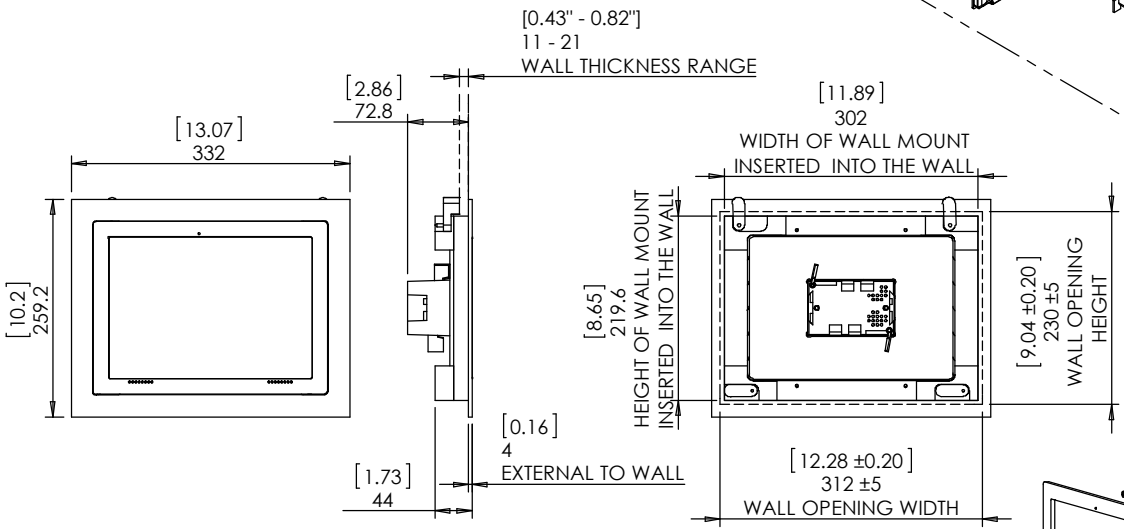

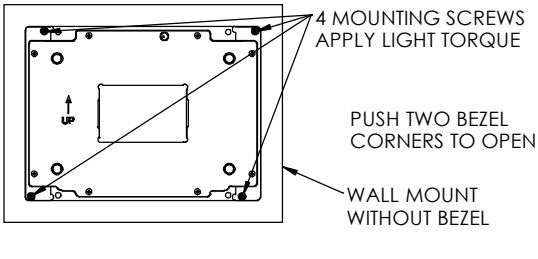

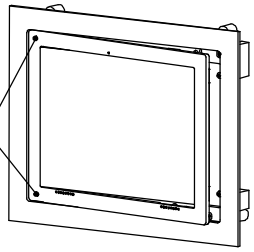

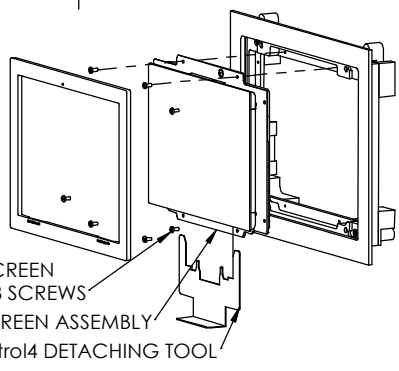

INFORMATION CONTAINED HEREIN IS PROPRIETARY AND MAY NOT BE USED, REPRODUCED OR COPIED WITHOUT WRITTEN CONSENT OF WALL-SMART ©

Phone: (201) 205-2056 / info@wall-smart.com